2 Sheets—Sheet 1.

P. C. McCUNE.

Washing-Machine.

No. 214,436. Patented April 15, 1879.

Fig: 1.

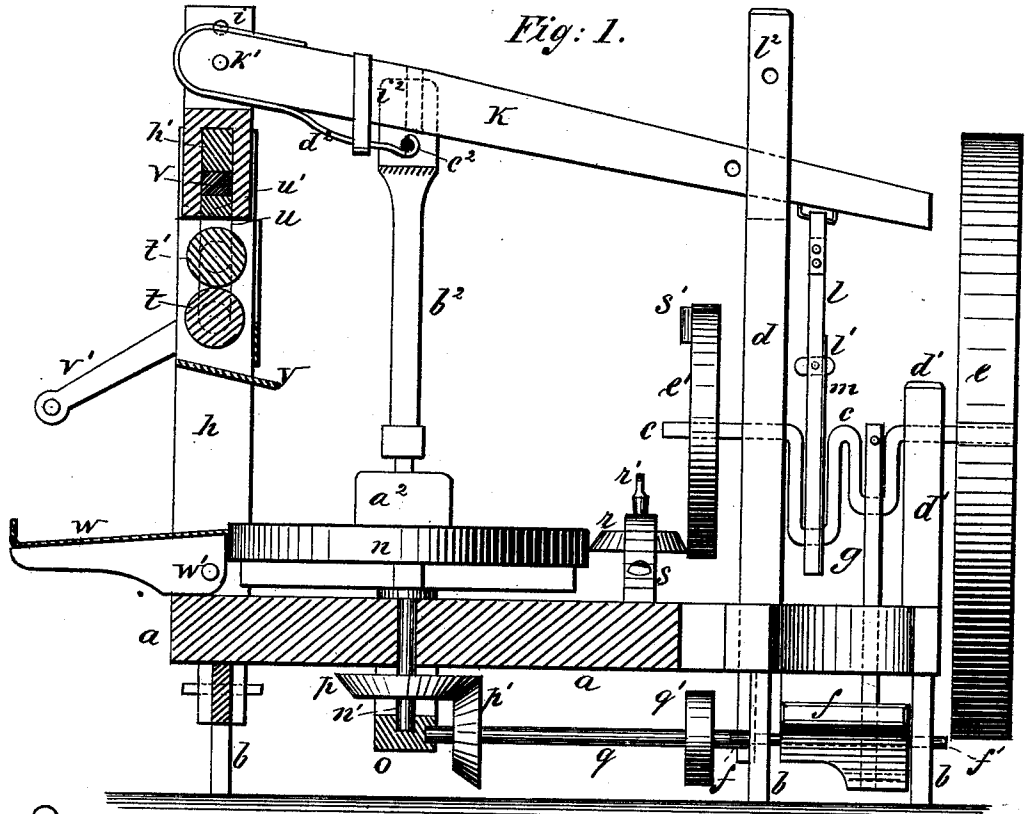

Fig: 2.

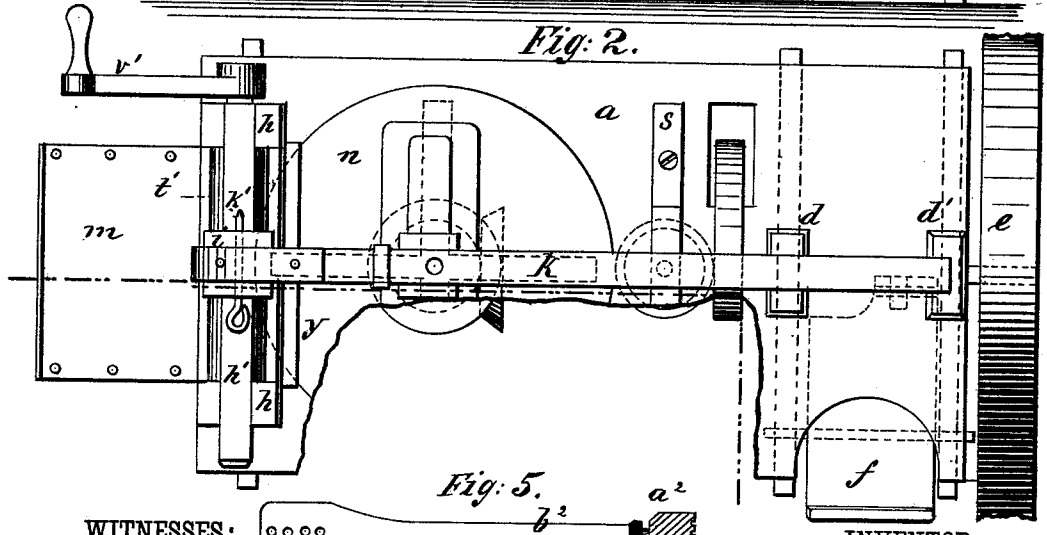

Fig: 5.

Fig: 4.

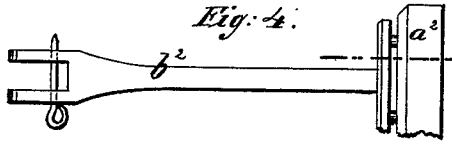

WITNESSES:

A. Schehl.

C. Sedgwick

INVENTOR:

P. C. McCune

BY Munn & Co

ATTORNEYS.

N. PETERS, PHOTO-LITHOGRAPHER, WASHINGTON, D. C.

2 Sheets—Sheet 2.

P. C. McCUNE.

Washing-Machine.

No. 214,436. Patented April 15, 1879.

Fig. 3.

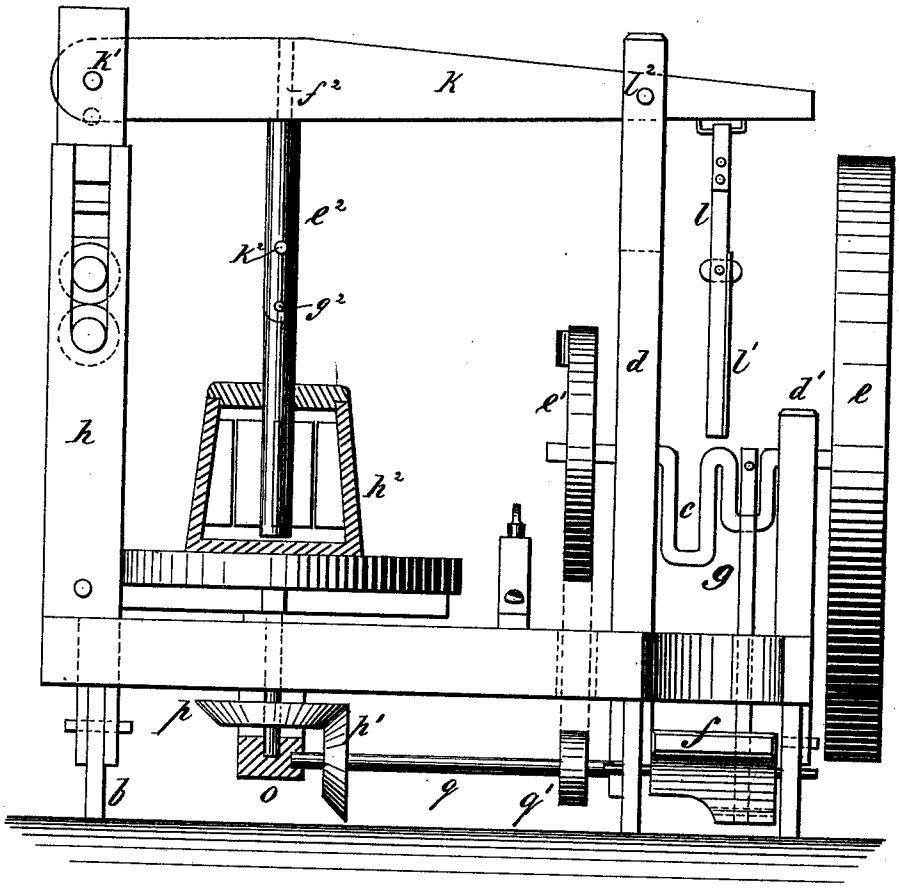

WITNESSES:

Achilles Schrehl.

C. Sedgwick

INVENTOR:

P. C. McCune

BY. Munn & Co

ATTORNEYS.

N. PETERS, PHOTO-LITHOGRAPHER, WASHINGTON, D. C.

UNITED STATES PATENT OFFICE.

PARDON C. McCUNE, OF MOUNT ETNA, IOWA.

IMPROVEMENT IN WASHING-MACHINES.

Specification forming part of Letters Patent No. **214,436**, dated April 15, 1879; application filed August 16, 1878.

To all whom it may concern:

Be it known that I, PARDON C. McCUNE, of Mount Etna, in the county of Adams and State of Iowa, have invented a new and Improved Machine for Washing and Churning, of which the following is a specification.

The object of this invention is to provide a washing-machine which will be efficient for the said purposes, and to do the work by mechanism that can be easily operated; and, further, to construct the machine in such a manner that it can be used for churning butter by a slight change of the parts.

My invention relates to a revolving platform on which the tub is to be placed, and a reciprocating lever that carries a pounder for pounding the clothes, and the said platform and pounder may be operated simultaneously by a treadle and connections.

The working of the machine causes a pounding action on the clothes, combined with a revolving motion of the tub. Thereby every part of the clothes is acted upon and cleansed.

When the machine is used for churning, a dasher is substituted for the pounder, and the churn placed on the revolving platform. A wringer is attached to the frame of the machine in a convenient position for use, and so that the water wrung out shall run into one tub and the clothes into another.

In the accompanying drawings, Figure 1 is a vertical longitudinal section of my improved machine. Fig. 2 is a plan view of the same. Fig. 3 is a view showing the machine as adapted for churning. Figs. 4 and 5 are detail views of the disconnecting-rod.

Similar letters of reference indicate corresponding parts.

a is the bed of the machine, supported on legs *b*. *c* is a double-crank shaft, that has bearings in the standards *d* d^1, near one end of bed *a*. *e* is a fly-wheel upon shaft *c*, outside of standard d^1; and e^1 is a pulley on the opposite end of shaft *c*, where it projects through standard *d*. *f* is a treadle, pivoted at f^1 in the legs *b b*, beneath bed *a*, and it is connected by a pitman, *g*, to one crank of shaft *c*. *h h* are posts or standards rising from bed *a*, at the end opposite to standard *d*, and connected together at their upper ends by a cross-bar, h^1, that carries a block, *i*. The block *i* projects above the bar h^1, and has a vertical mortise in it. *k* is a lever, one end of which passes into the mortise in block *i*, where it is held by a pin, k^1, that is the fulcrum of lever *k*. There are two or more holes in both lever *k* and block *i*, whereby the height and length of lever *k* can be adjusted by changing the pin k^1. The lever *k* extends the length of bed *a*, and passes at its outer end through the slotted upper end of standard *d*, and it is connected outside of standard *d* by a pitman, *l*, to one crank of shaft *c*. The connection of pitman *l* to the crank is made by a slot in the end of the pitman *l*, that is passed over the crank-pin, and is held in position by a swinging latch, *m*, which prevents the pitman *l* from leaving the crank. They may be disconnected by turning the latch *m*. l^1 is a button on pitman *l*, that holds the latch *m* in place. *n* is a horizontal table or platform, preferably circular, that is supported above the bed *a* by a vertical shaft or arbor, *n'*. The arbor *n'* passes through the bed *a*, and has a bearing at its lower end in a bracket, *o*, attached to the under side of bed *a*. *p* is a miter, friction, or gear wheel keyed on shaft *n'*. *q* is a horizontal shaft, which is journaled in the bracket *o* and one of legs *b*, and carries a second miter-wheel, *p'*, engaging with friction-wheel *p*. The shaft *q* also carries a small pulley, *q'*, that is in line with pulley e^1 on shaft *c*, so that a belt may pass from *q'* to e^1, suitable holes in bed *a* being provided for that purpose. *r* is a friction-wheel that turns on a pin, *r'*, in a bracket, *s*, on bed *a*. The position and size of wheel *r* are such that it bears against the edge of platform *n*, and also comes adjacent to the side of pulley e^1. *s'* is a spur or projection on pulley e^1, which comes into contact with wheel *r* at every revolution of pulley e^1, and an intermittent revolution is thereby imparted to platform *n*. *t t'* are wringer-rollers, that are held in the posts *h h* by the roller-shafts passing into a vertical mortise, *u*, in each post *h*. The shaft of wringer-roll *t* rests upon the bottom of mortises *u*, and a sliding box in each groove *u* above the shaft of upper roller, *t'*, supports the ends of a spring-bar, *w'*. *v* is a spring, such as a coiled wire or a block of rubber, at the upper side of bar *w'*, and the bar *w'* is held midway of its length in the mortised lower

end of block *i*. This construction is similar to ordinary clothes-wringers. The lower roller, *t*, is provided with a handle, *r'*, on its shaft, outside post *h*. *w* is a shelf, pivoted at *w'* between posts *h*, below the wringer. When turned down in the position shown in the drawings, a tub may be placed upon it to receive the clothes from the wringer; or it can be turned up vertically out of the way. *y* is an inclined metal plate, fixed between posts *h*, just below roller *t*. It is inclined inward, to cause the water from the wringer to run into a tub placed on platform *n*.

The machinery described, when used for washing clothes, will have a pounder, a^2, attached, as shown in Fig. 1, to lever *k*, so that the pounder hangs directly over the center of platform *n*. The pounder a^2 is hung by its rod b^2, that has a mortise at its upper end passing at each side of lever *k*, and a pin, c^2, is passed through a hole in the sides of the mortise, and engages with the hooked end of spring d^2, which is attached to lever *k*. This connection permits the rod b^2 to give endwise, and there are a number of holes provided for pin c^2, whereby the pounder can be adjusted. The spring d^2 is sustained by a strap or loop, i^2, passing around lever *k* and beneath spring d^2.

The pounder a^2 is oblong in shape, (see Fig. 4,) and the face which comes in contact with the clothes is grooved, as seen in Fig. 5, to form air-cells, and its action upon the clothes is to force the water through the interstices of the cloth and expel the dirt.

A tub is to be placed on the platform *n*, and the clothes to be washed placed therein. The treadle is then to be operated, and a reciprocation thereby imparted to lever *k* and pounder a^2, while at the same time an intermittent motion is given to platform *n* and the tub.

When the washing is completed the pounder a^2 may be removed by raising lever *k* and disconnecting rod b^2. The pitman *l* can be disconnected from its crank by turning latch *m*, and lever *k* may then be raised out of the way.

When the machine is used for churning, the churn is to be placed upon platform *n*, and the dasher-staff e^2 connected to lever *k* by passing a pin, f^2, on its upper end into a hole that is bored vertically through lever *k*. The dasher-staff e^2 is in two parts connected by a hinge-pin, g^2, which construction permits the dasher to be turned up out of the way while the churn h^2 is being placed or removed; and to hold the staff rigidly when turned down, a pin will be inserted in a hole, k^2, so as to prevent the staff from turning on its hinge.

After the churn and dasher are in place, a pin is to be passed through a hole, l^2, in post *d*, and through a hole provided in lever *k*, and the lever *k* and dasher e^2 will thus be held rigidly. The pitman *l* will be disconnected when the machine is used for churning, and also the friction-wheel *r* removed. A belt will be placed around pulleys e^1 and q', and the operation of the treadle will cause a rapid revolution of platform *n* and churn h^2.

It may be preferable sometimes to make use of the belt from pulley e^1 to q' when washing instead of depending on the friction-wheel *r* as a means for turning the tub.

The churn may be of wood or metal, and is provided with internal vertical ribs, between which and the stationary dasher the cream is broken.

I do not limit myself to the details of construction set forth, as they may be varied without departing from my invention.

Having thus described my invention, I claim as new and desire to secure by Letters Patent—

1. The combination and arrangement of the platform *n*, friction-wheel *r*, pulley e^1, crank-shaft *c*, fly-wheel *e*, pitman *l*, lever *k*, pitman *g*, and treadle *f*, substantially as and for the purposes set forth.

2. The shaft *g*, miter-wheels *p p'*, and pulley *q'*, in combination with the shaft *c*, pulley e^1, pitman *g*, treadle *f*, and platform *n*, the pulleys e^1 *q'* being connected by a belt, substantially as and for the purposes set forth.

PARDON COOK McCUNE.

Witnesses:
A. I. LEAP,
H. L. LUNT.