(No Model.)

L. COFFIN.

MECHANISM FOR OPERATING SIMULTANEOUSLY A CHURN, WASHING MACHINE, IRONING STAND, &c.

No. 247,747. Patented Oct. 4, 1881.

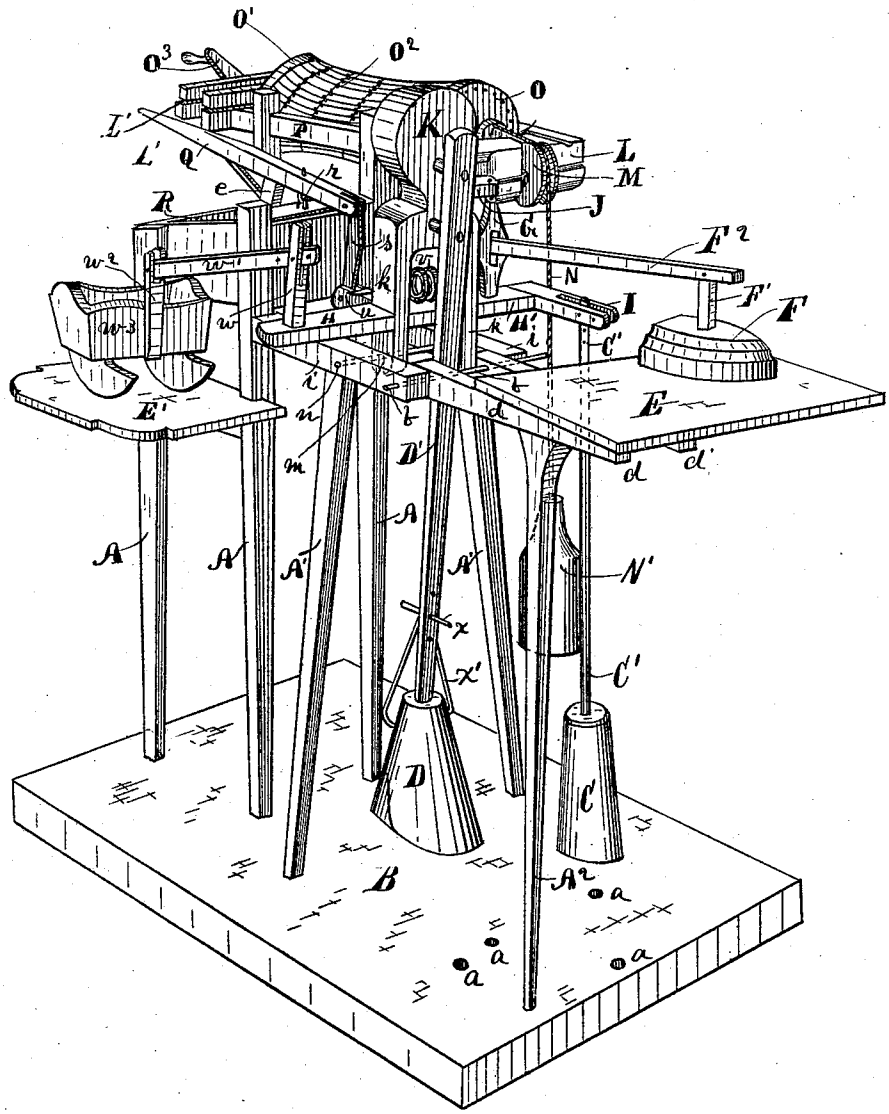

Witnesses;
W. D. Williamson
G. H. Bennett.

Inventor.
Leven Coffin.
Per E. G. Siggers
his attorney

N. PETERS. Photo-Lithographer, Washington, D. C.

UNITED STATES PATENT OFFICE.

LEVEN COFFIN, OF WHITELAND, INDIANA, ASSIGNOR TO HIMSELF AND BURTON FIPPIN, OF HAMILTON COUNTY, INDIANA.

MECHANISM FOR OPERATING SIMULTANEOUSLY A CHURN, WASHING-MACHINE, IRONING-STAND, &c.

SPECIFICATION forming part of Letters Patent No. 247,747, dated October 4, 1881.

Application filed June 14, 1880. (No model.)

To all whom it may concern:

Be it known that I, LEVEN COFFIN, a citizen of the United States, residing at Whiteland, in the county of Johnson and State of Indiana, have invented a new and useful mechanical movement or combination of mechanism for operating simultaneously a churn, washing-machine, ironing-stand, &c., of which the following is a specification.

My invention relates to a new and useful mechanical movement or combination of mechanism for operating simultaneously a churn, washing-machine, ironing-stand, cradle, &c.; and the object of my improvement is to economize labor and facilitate the performance of several branches of work at the same time.

I attain this object by the mechanism illustrated in the accompanying drawing, in which the entire device is represented by a single perspective view.

B represents a base, on which is secured the standards A A A for supporting the washing-machine, wringer, and cradle-platform. A′ A′ are the standards for supporting the power mechanism, and A^2 is an adjustable standard for supporting the ironing-stand.

The power mechanism consists of the head K, with forks *k k* below. Said forks are notched out at their lower ends, as shown by the dotted lines at *m*, to receive the pivot-bar *n*, on which the head vibrates. The head K is further provided with a downward-projecting arm, D′, having a pin, *x*, near its lower end to receive the bail *x′* of the weight D.

The weight D is provided a socket in its upper end to receive the lower end of the arm D′.

The forks *k k* of the head K are provided with a cross-bar, H H′, which extends across between the forks *k k* and projects beyond said forks, forming arms which vibrate with the head on the pivot *n*. The pivot *n* is secured in the extended timbers *i i* of the frame and supported by the standards A′ A′. To the ends of the timbers *i i* are pivoted the arms *d d*, on which is mounted the adjustable ironing-stand E, that is supported by the adjustable standard A^2, the lower end of which may be inserted in any one of the holes *a* in the base B, and thus adjust the table E up or down.

The cradle-floor E′ is secured to the standards A A of the washing-machine, as shown.

The rear side of the washing-machine R is provided with a side extension, L, in which is mounted a wringer composed of two heads, O O′, and a netting of cord, O^2. This netting is open on one side to permit clothes to be inserted. The end O is supported by a cord, N, which passes over the pulley M, and one end is made fast to the head O′. The other end is provided with a weight, N′, of sufficient weight to hold the netting O^2 well stretched. The other head, O′, is provided with a shaft, which operates in the frame L′ L′, and this shaft is provided with a crank, O^3, by means of which the wringer-netting may be twisted and the clothes wrung out.

On the side of the cross-bar H midway between the forks *k k*, is pivoted an arm, *u*. Its front end is provided with a link, *s*, which connects with the operating-lever Q. This lever Q is pivoted to the rear end of the washing-machine by the links or staples *r*, and the lever is provided with a downward-projecting arm, *e*, to the lower end of which is attached any ordinary vibrating washing-machine rubber. (Not shown.)

The pivoted arm *u* is held down by a spring, *v*, mounted on the cross-bar H, between the forks *k k*, the end of which spring rests on the top of the arm *u*, near its pivot-joint with the link *s*.

The outer end of the arm H is provided with a vertical arm, *w*, the upper end of which is pivoted to one end of the connecting-rod *w′*, and the other end of the connecting-rod *w′* is pivoted to the upright w^2, attached to the side of the cradle w^3, as shown. The other arm, H′, of the head K is provided with a vertical swiveled upright, G, the lower end of which is pivoted to the arm H′ close to the head K, and the upper end is pivoted to an arm, J, projecting from the side of the head K. The swiveled upright G has a mortise in it, in which is pivoted one end of the connecting-rod F^2. The other end of the connecting-rod is attached to the sad-iron F by the stud F′, as shown.

The extreme end of the arm H′ is provided with a rearward-extending arm; I, which is connected with the churn-dasher C′, which operates in the churn C, mounted on the base B, as shown.

The operation of my improved device is as

follows, to wit: The clothes to be washed are placed with the water in the washing-machine R. The baby is placed in the cradle w^3. The cream in the churn C, and the clothes to be ironed placed on the table E. The heated iron is then attached to the arm F^2, and the machine is ready for operation. The handle Q is then moved up and down, communicating motion to the head K and weight D, causing the weight to swing forward and backward. The head K vibrates on the pivot *n*, with its side arms, H, H′, and J, and arms *w* I, and swiveled arm G, and communicates motion to the churn, the iron, the cradle, and washing-machine through their various connecting links or rods. When the clothes are washed they are placed in the netting O^2, and the crank O^3, revolving, thus twisting the netting O^2 and raising the weight N′ until the clothes are wrung out.

The iron F may be moved laterally in either direction, while its forward-and-backward motion is governed by the motion of the weight.

What I claim as my invention, and desire to secure by Letters Patent, is—

In combination with the weighted swinging pendulum consisting of the head K, arm D′, weight D, and side arms, H H′, the vertical swiveled upright G, the lever-handle Q, arms *w*, I, and J, their respective links or rods for operating simultaneously the washing-machine, the cradle, the churn-dasher, and the sad-iron, as shown and described.

In testimony whereof I have signed my name to this specification in the presence of two subscribing witnesses.

LEVEN COFFIN.

Witnesses:
E. O. FRINK,
GEO. H. RENNETT.