A. J. Mapes,

Washer and Wringer,

No. 64,122, Patented Apr. 23, 1867.

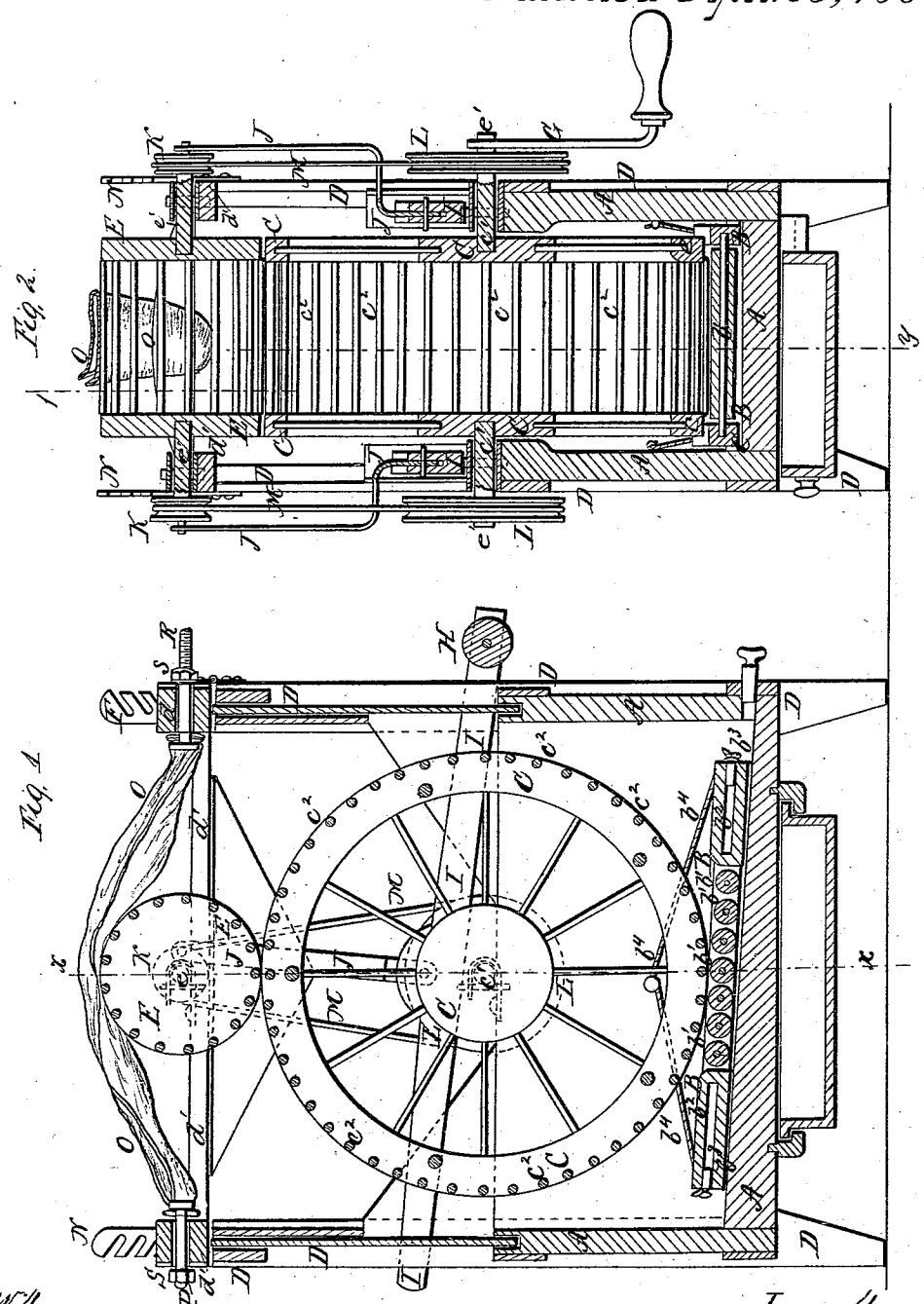

Witnesses;

Theo Tusche

J. A. Service

Inventor;

A. J. Mapes

Per Munn & Co

Attorneys

N. PETERS, PHOTO-LITHOGRAPHER, WASHINGTON, D. C.

United States Patent Office.

ANDREW J. MAPES, OF INDEPENDENCE, MISSOURI.

Letters Patent No. 64,122, *dated April* 23, 1867.

IMPROVED WASHING MACHINE.

The Schedule referred to in these Letters Patent and making part of the same.

TO ALL WHOM IT MAY CONCERN:

Be it known that I, ANDREW J. MAPES, of Independence, in the county of Jackson, and State of Missouri, have invented a new and improved Combined Washing, Wringing, and Churning Machine; and I do hereby declare that the following is a full, clear, and exact description thereof, which will enable others skilled in the art to make and use the same, reference being had to the accompanying drawings, forming part of this specification, in which—

Figure 1 is a vertical longitudinal section of my improved machine, taken through the line *y y*, fig. 2.

Figure 2 is a vertical cross-section of the same, taken through the line *x x*, fig. 1.

Similar letters of reference indicate like parts.

My invention has for its object to furnish an improved machine, by means of which clothes may be quickly and thoroughly washed and wrung, and by means of which churning may be easily, conveniently, and quickly accomplished; and it consists in the buoyant or floating rubber board, constructed as hereinafter described, in the combination of the large and small wheels with each other and with the rubber-board, box, and frame of the machine; in the combination of the wringer, consisting of the wringing-cloth, square bolt, round bolt, and crank with each other and with the frame of the machine; and in the combination of the long levers, pitmen, pulleys, and bands with each other and with the wheels and frame of the machine, the whole being constructed and arranged as hereinafter more fully described.

A is the box of the machine, which is rectangular in form, and may be made of any desired capacity. B is the floating rubber-board, which is made of such a size as to lie within the box A without touching the sides or ends of said box. The middle part of the board B consists of a number of rollers, b^1, as shown in figs. 1 and 2. The board B is made buoyant by having air-chambers, b^2, formed in its end parts, b^3, as shown in fig. 1, and it is kept in its proper position, and yet left free to be floated by the water up against the lower side of the wheel C, by cords, b^4, attached to it and to the sides of the box A, as shown in figs. 1 and 2. The journals c^1 of the wheel C revolve in bearings formed in the side-timbers of the frame D, as shown in fig. 2. The rim of the wheel C is formed of rods or slots, c^2, arranged at such a distance apart as to allow the clothes to be passed around them with their ends hanging outward, so as to be rubbed by the revolution or oscillation of said wheel between it and the rubber-board B. E is a small wheel, constructed in substantially the same manner as the large wheel C, the journals e' of which revolve in bearings formed in the upper or movable part d^1 of the frame D. The part d' of the frame D is hinged at one end to the stationary part of said frame, and at the other end is secured by the racks F, as shown in figs. 1 and 2, so that the height of the said movable part of the frame may be adjusted at pleasure. In using the machine for washing clothes, the clothes are arranged upon the wheel C as before described, the necessary amount of water is poured into the box A, and the wheel C revolved or oscillated by the crank G attached to the end of one of the journals c^1, rubbing the clothes between the rim of said wheel and the floating rubber-board B. In this case the soap is put into the wheel E, and is evenly applied to the clothes by the revolution of said wheel, caused by the friction between its rim and the rim of the wheel C. In using the machine for churning, the end of the dasher-handle is attached to the roller or cross-bar H, the ends of which are pivoted to and between the ends of the long levers I, which pass through slots in the frame D, and the other ends of which are pivoted to the said frame, as shown in dotted lines in fig. 1. To the middle part of the levers I, just above the journals c^1 of the wheel C, are pivoted the lower ends of the pitmen J, the upper ends of which are removably pivoted to crank-pins attached to the pulleys K, placed upon the journals e^1 of the wheel E, as shown in dotted lines in fig. 1. L are pulleys attached to the ends of the journals c^1 of the wheel C, and which are connected with the pulleys K by the bands M, as shown in figs. 1 and 2. The bands M are of such a length that when the movable part d' of the frame D rests upon the stationary part of said frame, they will be so slack as not to revolve the wheel E to operate the levers I, so that when the machine is to be used for churning, the movable part d' of the frame must be raised up and secured in place by the racks N attached to the upper side of the stationary part of the frame D, and taking hold of pins or catches attached to the unhinged end of the said part d'. O is the wringing-cloth, extending longitudinally across the movable part d' of the frame D. One end of the cloth O is attached to one end of the square bolt P, which passes through a square hole in the end-piece of said frame, so that it cannot turn therein. The other

end of the cloth O is secured to the end of the round bolt R, which passes through and works in a round hole formed in the other end-piece of the said part of the frame. The wringer is secured in place by nuts, S, screwed upon the projecting ends of the bolts P and R, and it is operated by the crank G, which is removed from the journal *e'* and attached to the end of the round bolt R for that purpose. In using the wringer, the small wheel E is removed, the clothes to be wrung are placed within the folds of the cloth O, the round bolt R is then passed through the end-piece of the frame *d'* and secured in place by the nut S. The crank G is then attached to said bolt and the clothes wrung by twisting them within the cloth O. T is a drawer, placed beneath the bottom of the machine for the purpose of holding the bands, keys, pitmen, &c., of the machine when not in use.

What I claim as new, and desire to secure by Letters Patent, is—

1. The buoyant or floating rubber-board B, constructed substantially as herein shown and described, and for the purpose set forth.

2. The combination of the large wheel C and the small wheel E with each other and with the rubber-board B, box A, and frame D of the machine, substantially as herein shown and described, and for the purpose set forth.

3. The combination of the long levers I, pitmen J, pulleys K and L, and bands M with each other and with the wheels C and E and frame D of the machine, substantially as herein shown and described, and for the purpose set forth.

ANDREW J. MAPES.

Witnesses:

SAMUEL HUMPHREY,

JAS. M. BRYANT.